pewag

STRONG IS NOT ENOUGH

www.pewag.com

pewag winner lifting clamps

Lifting

DHW pewag winner horizontal lifting clamps

For lifting and horizontal moving of thin sheets that deflect when being lifted. Compact shape and relatively low unit weights with a high lifting capacity.
Horizontal lifting clamps DHW **must always be used in pairs (or multiples thereof).** Max. apex angle: 60°

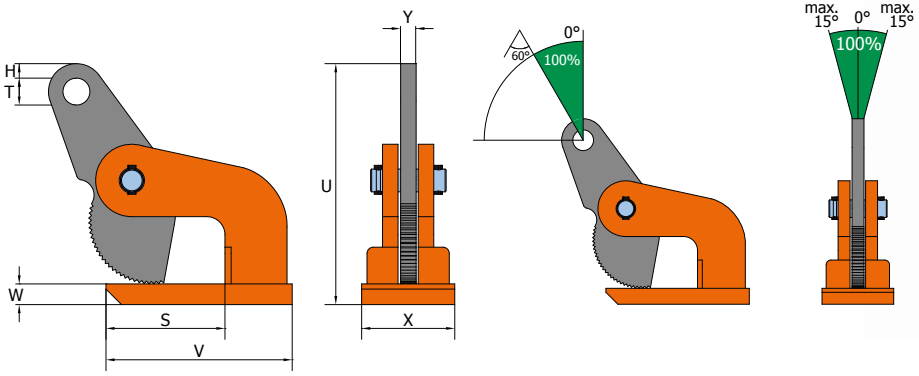

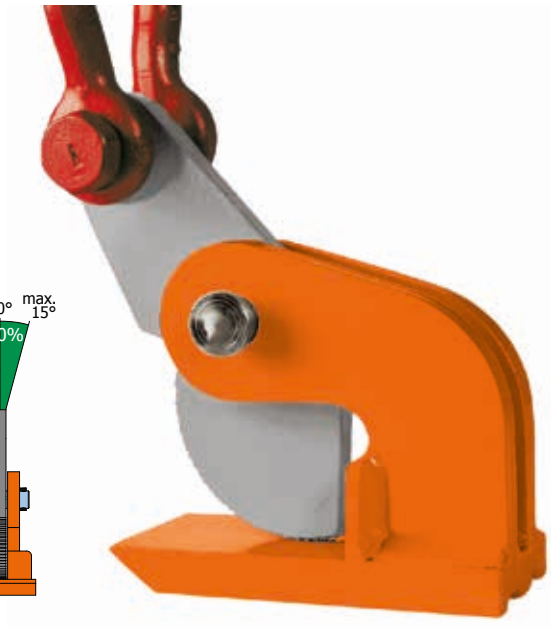

Code	Load capacity [kg/pair]	Jaw-opening R [mm]	V [mm]	S [mm]	W [mm]	T [mm]	H [mm]	X [mm]	U [mm]	Y [mm]	Weight [kg/pc.]
DHW 1 t	1.000	0-15	140	99	10	22,50	13,50	65	167	15	2,50
DHW 2 t	2.000	0-35	180	114	20	26	14	80	233	15	8
DHW 4 t	4.000	0-50	235	129	30	40	25	130	304	20	18
DHW 6 t	6.000	0-50	235	129	30	40	25	130	304	20	18